Kaya® Gun Metal

TWIN SHOWER

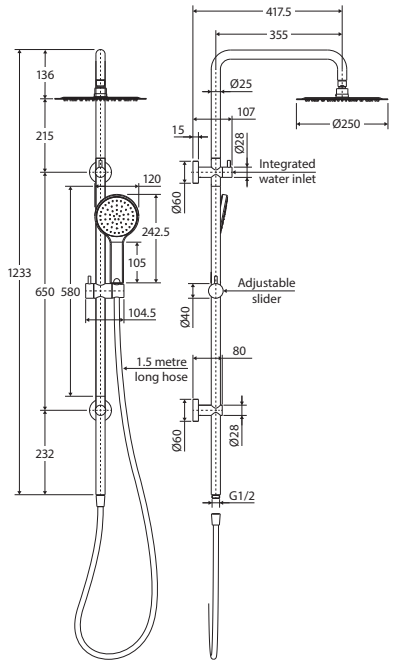

Features

WELS 3 Star rated, 9L/min

Rail:

- Integrated top water inlet and diverter
- Slider to adjust height of hand shower
- Made from solid brass
- 1.5 metre stainless steel flexible hose

KAYA Overhead Shower (411125):

- Ultra-thin 2 mm profile
- Easy to clean TPR nozzles
- Brass swivel joint
- Made from stainless steel
- Female ½" BSP inlet

KAYA Hand Piece (MSH115):

- Single water-flow setting
- Easy to clean TPR nozzles
- Made from ABS

Please note: This product may have a visible Fienza or Watermark logo.

Available in

Gun Metal Heads
455109GM

Matte Black Heads
455109GMB

Cleaning & Care

- Regularly clean with mild soapy water using a microfibre cloth.
- In highly polluted or coastal locations, we recommend cleaning 2-3 times per week.
- Do not use harsh detergents, bleach, cream cleaners or citrus based cleaners. These substances are abrasive and will damage the surface.
- Do not use undue pressure and wipe in one direction only.

WaterMark

The more stars the more water efficient.
WATER RATING
www.waterrating.gov.au
9.0 litres per minute
In accordance with AS/NZS 6400
Licence No. 0252
Fienza

While we aim to ensure specifications are correct at the time of publication, Fienza reserves the right to make modifications without prior notice. Physical colour may vary from image shown.
All measurements are shown in millimetres. Always use physical product measurements for mark-ups and roughing-in as the technical drawing may differ from actual product received.