PRODUCT:	SOUL CLASSIC HAND SHOWER ON HOOK
SIZE:	265H x 76D x 130W
TYPE:	SHOWER
VERSION: 01	DATE: 19/04/2023

CHROME (CHROMIUM PLATED)	JTAPCSHSETSOUCP
MATTE WHITE (POWDER COATED)	JTAPCSHSETSOUWH
MATTE BLACK (ELECTROPLATED)	JTAPCSHSETSOUBK
BRUSHED NICKEL (PVD)	JTAPCSHSETSOUNK
BRUSHED BRASS (PVD)	JTAPCSHSETSOUBB
BRUSHED COPPER (PVD)	JTAPCSHSETSOUBCO

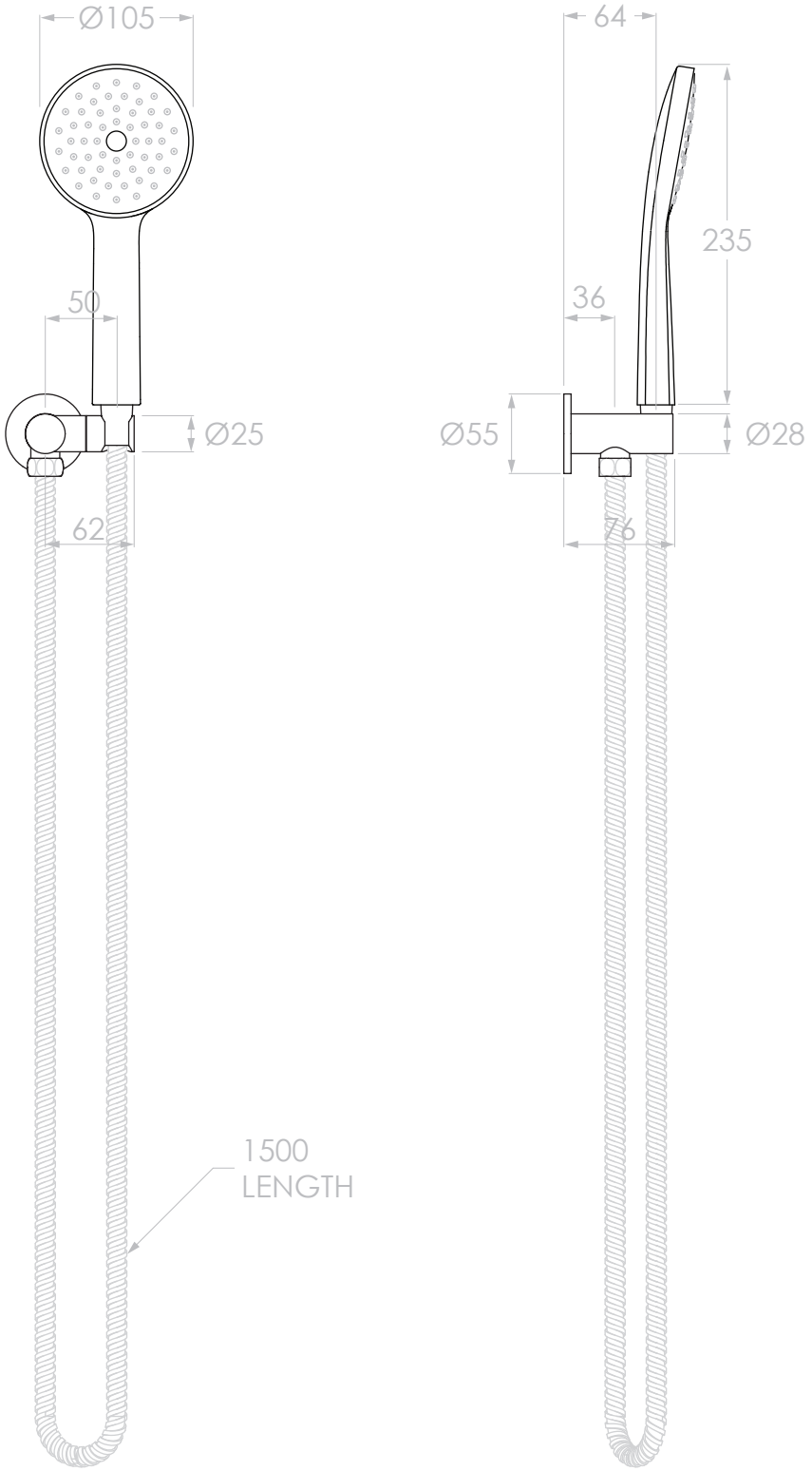

NOTES:

ALL DIMENSIONS ARE NOMINAL AND SUBJECT TO CHANGE.
DO NOT DRILL OR ROUGH IN UNTIL YOU HAVE RECEIVED AND MEASURED YOUR PRODUCT.
ALL DIMENSIONS ARE IN MILLIMETRES.
DO NOT MEASURE FROM DRAWING.

WATER SUPPLY REQUIREMENTS:

NOT RECOMMENDED FOR GRAVITY FED WATER SYSTEMS OR WATER TANKS.

WORKING PRESSURE:	350 – 500KPA	(INCLUDING COLD AND HOT WATER PRESSURE)
MAXIMUM PRESSURE:	73PSI / 500KPA	
TEMPERATURE RATING:	5°C - 65°C	(MUST NOT EXCEED 70°C)

INSTALLATION SHOULD COMPLY WITH AUSTRALIAN STANDARD AS/NZS 3500 OR RELEVANT LOCAL AUTHORITY REQUIREMENTS.